Deploying Private 5G for Mission-Critical Communications

A Case Study

10 April 2024

AGENDA

Contents

- Presenters
- Requirements
- Use cases

TODAY'S PRESENTERS

- Dr. Juanyu Bu, Executive Vice President – Engineering
  - jbu@cts1.com
  - C 901.240.5771
- Rob Cerbone, VP Product Management and Marketing
  - rcerbone@cts1.com
  - C 301.828.8686

DEPLOYING 5G FOR MISSION-CRITICAL COMMS

Requirements

TRENDS DRIVING DIGITAL TRANSFORMATION IN MANUFACTURING

The global pandemic exposed weaknesses in the modern industrial enterprise

Staffing Shortages

Workforce shortages forced industrial enterprises to rethink manual processes and embrace automation

Supply Chain

Disruptions required increased visibility from raw materials to finished product to customer to optimize yields

Operational Technology

Existing OT platforms are dated with proprietary protocols and more analog than digital technologies

Disparate Networks

Growing number of disparate IT networks required to meet all OT requirements (e.g. industrial ethernet, Wi-Fi, DAS, LMR, NB IoT)

Missing Data

While transformation through increased automation is desired, the lack of available process data and insights makes it difficult to prioritize initiatives

Operational Flexibility

Operational flexibility required to meet supply chain challenges and shifting customer demand creates networking challenges

PRIVATE CELLULAR ENABLES DIGITAL TRANSFORMATION

Enterprises need a new kind of networking to meet their ever-increasing requirements

Businesses are bringing increased automation and visibility to operations

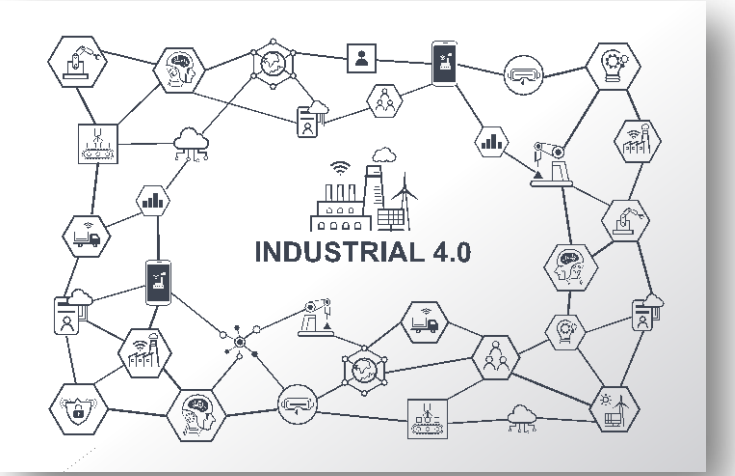

Current technologies fall short

Private Cellular enables Industry 4.0

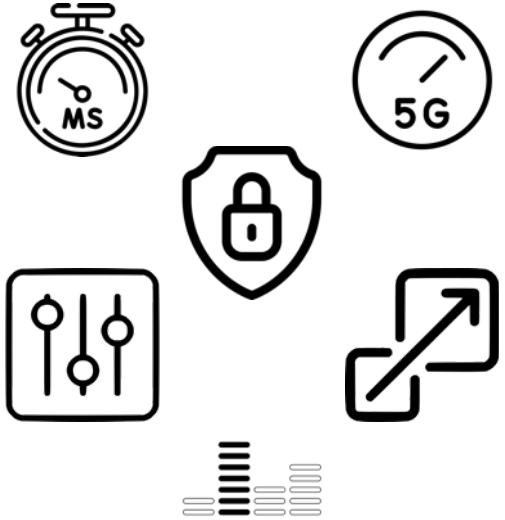

MISSION CRITICAL

GLOBAL SEMICONDUCTOR MANUFACTURER

Deploy 5G Network for mission-critical communications

New campus with multiple buildings for manufacturing and office space

Currently leveraging 5G in semiconductor fabrication facilities outside US for mission-critical manufacturing operations use cases

Desire to leverage low-cost CBRS licenses for a Private 5G network at new fab

Key requirements

1. Reliability for efficient operations and worker safety
2. Security for maximum uptime
3. Low latency for command and control of manufacturing equipment, environmental monitoring
4. Wireless connectivity for operational flexibility

5G PCN HIGH-AVAILABILITY ARCHITECTURE

Key network elements required to meet secure, high-availability requirement

- Dual core, RAN, and coax cables with MIMO antennas
- Active-Active Core configuration with both cores on premise
- Different spectrum for each RAN radio layer
- Load balancing mechanism to share traffic over the 2 layers
  - If fail-over happens to one layer, the other layer can support traffic from all UEs
- 2X GPS antennas and cable runs
- Remote management via CTS NOC

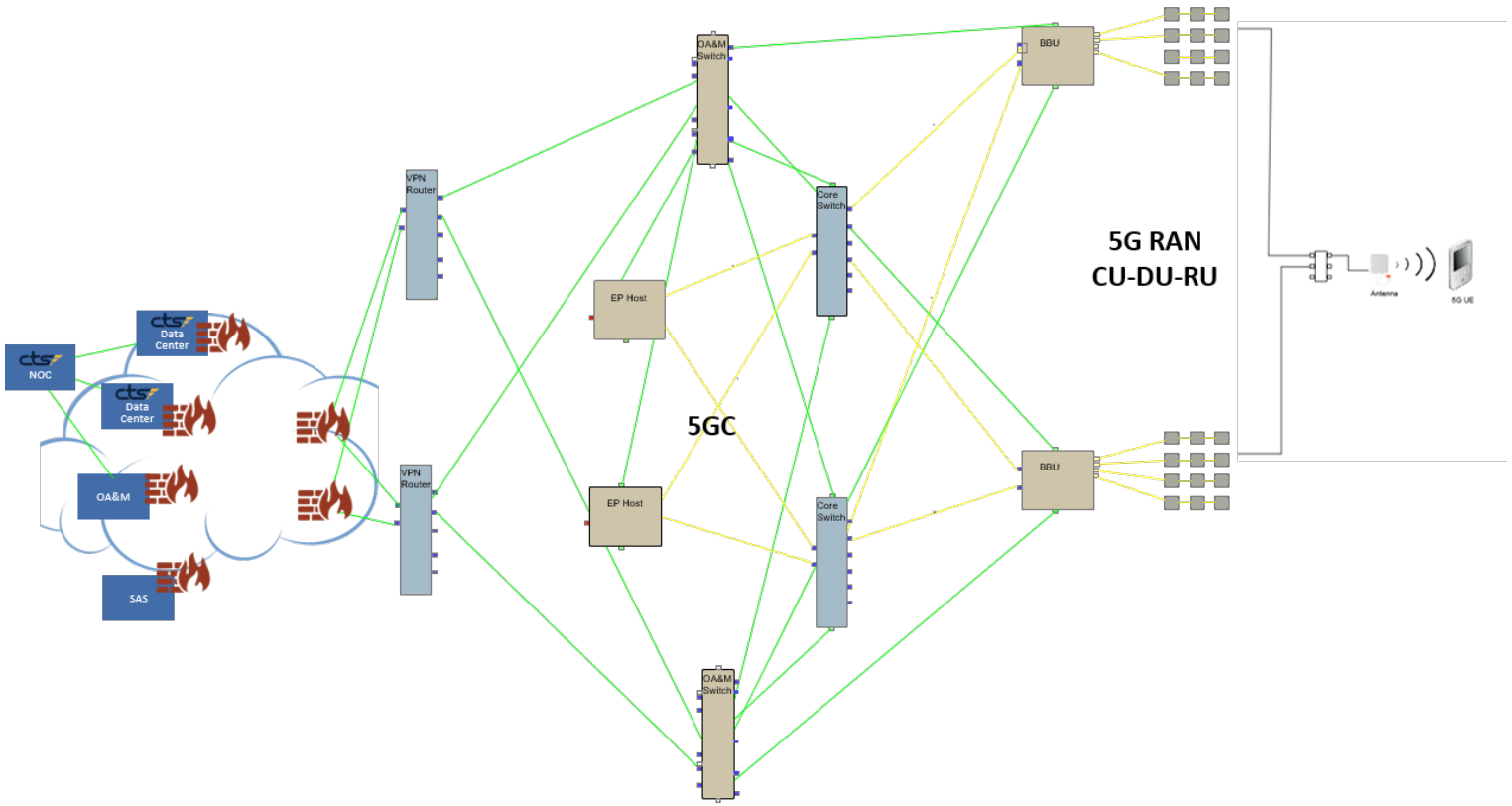

Deploying 5G for Mission-Critical Comms

Use Cases

MANUFACTURING EQUIPMENT

Problem

High-availability communications for manufacturing equipment control

Solution

5G gateways connecting manufacturing equipment to Manufacturing Execution System (MES) that manages the fabrication process to ensure quality and yield targets

Benefits

Reliable, low-latency communications ensures real-time command and control for critical manufacturing processes to minimize resource waste and maximize production

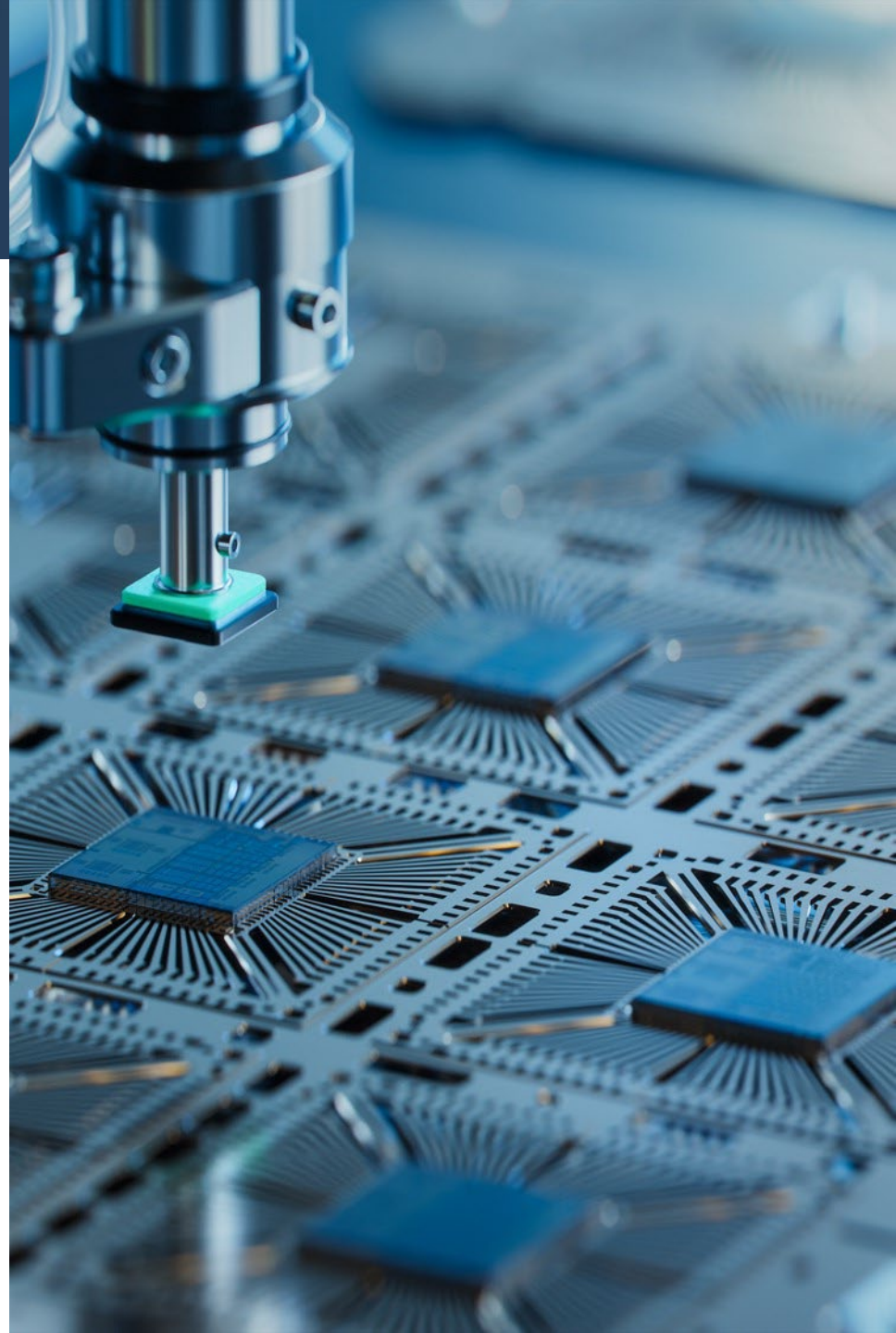

ENVIRONMENTAL MONITORING

Problem

Environmental monitoring to safeguard highly-skilled fabrication workers from byproducts of semiconductor etching process

Solution

5G gateways connecting sensors to intelligent gas detection systems monitoring airborne chemical concentrations and shutting down operations when levels exceed safe levels

Benefits

Reliable, low-latency communications ensures worker safety

SAFETY AND SECURITY

Problem

Certifying that employees entering the clean rooms have appropriate Personal Protective Equipment (PPE) to ensure safety and contaminant-free manufacturing

Solution

5G connected video cameras delivering high-quality video that is buffer- and artifact-free for processing through an AI platform that immediately alerts management about employee non-compliance

Benefits

Safeguarding both the employee and the manufacturing process

AUTONOMOUS GUIDED VEHICLES

Problem

Command and control connectivity for autonomous pallet jacks carrying raw silicon wafers into and around the fabrication facility as well as finished products throughout the packaging facility

Solution

5G connected pallet jacks can safely maneuver throughout the facility without risk to worker safety or production disruption

Benefits

Reliable, low-latency communications ensures real-time communications for crash-free operations

GUIDED RAILCARS

Problem

Command and control connectivity for autonomous railcar system transporting finished products to the packaging area

Solution

5G connect railcar system provides critical command and control to ensure collision-free operations and coordination with manufacturing equipment for maximum process efficiency

Benefits

Reliable, low-latency communications ensures efficient and collision-free operations

AUGMENTED REALITY

Problem

Connectivity for smart glasses to support workers in manufacturing and quality control processes

Solution

5G-connected smart glasses connected via gateway provide critical information to workers in a timely fashion, increasing efficiency and yield

Benefits

Reliable, low-latency communications ensures consistent worker connectivity

THANK YOU!

cts
COMMUNICATION
TECHNOLOGY SERVICES